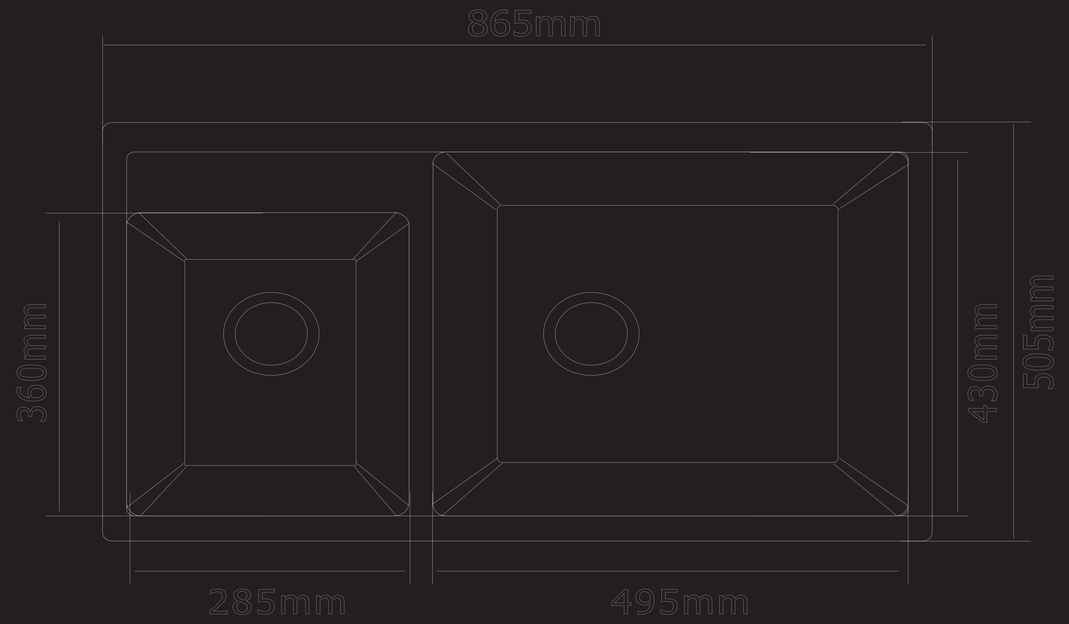
865mm
360mm
430mm
505mm
285mm
495mm

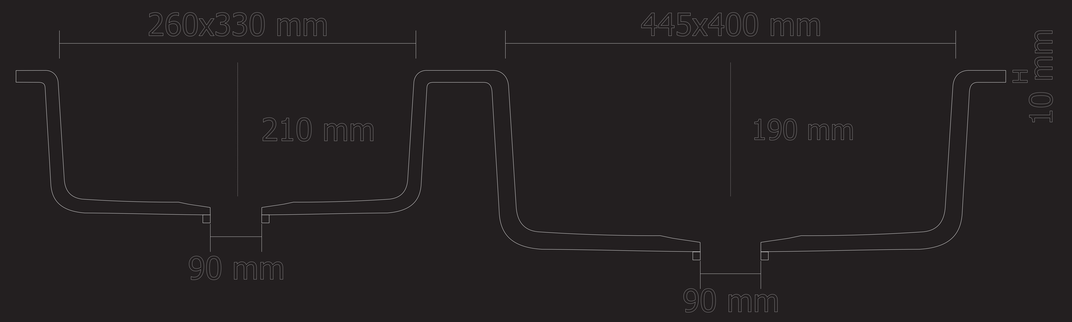
260x330 mm
445x400 mm
210 mm
190 mm
10 mm
90 mm
90 mm