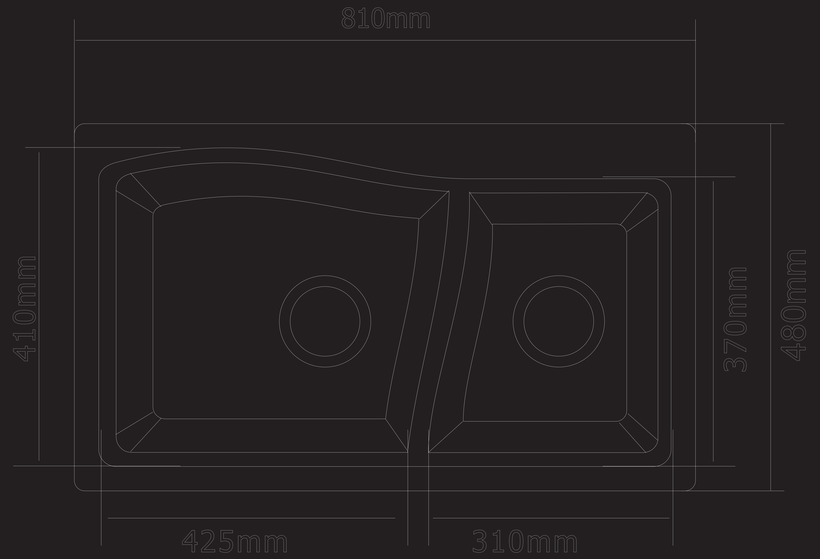
810mm
410mm
370mm
480mm
425mm
310mm

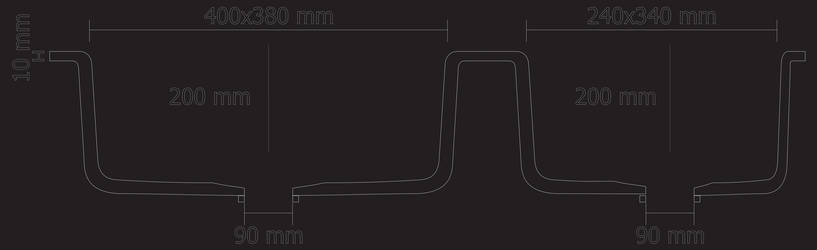
400x380 mm
240x340 mm
10 mm
200 mm
200 mm
90 mm
90 mm