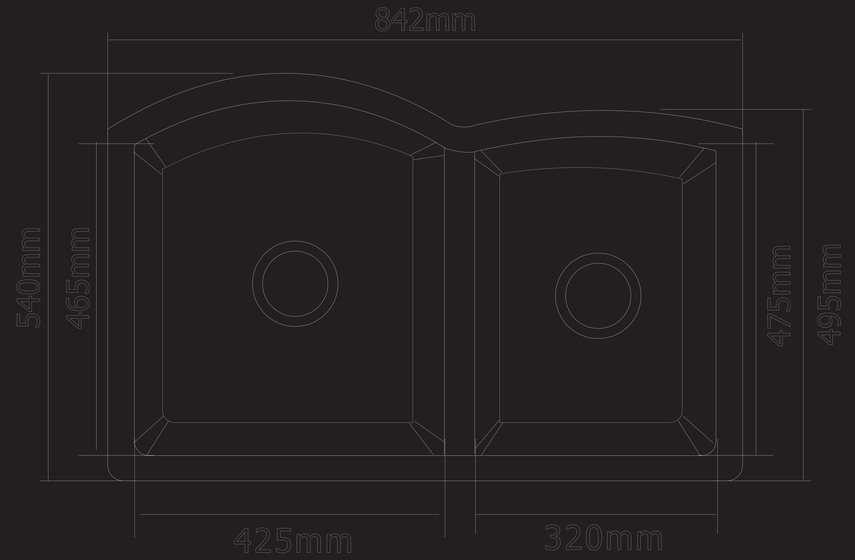
842mm
540mm
465mm
475mm
495mm
425mm
320mm

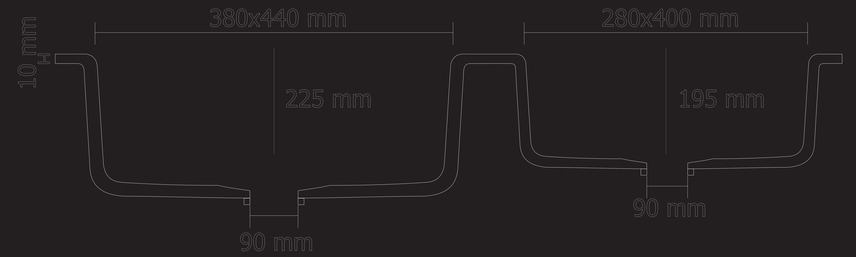
380x440 mm
280x400 mm
10 mm
225 mm
195 mm
90 mm
90 mm