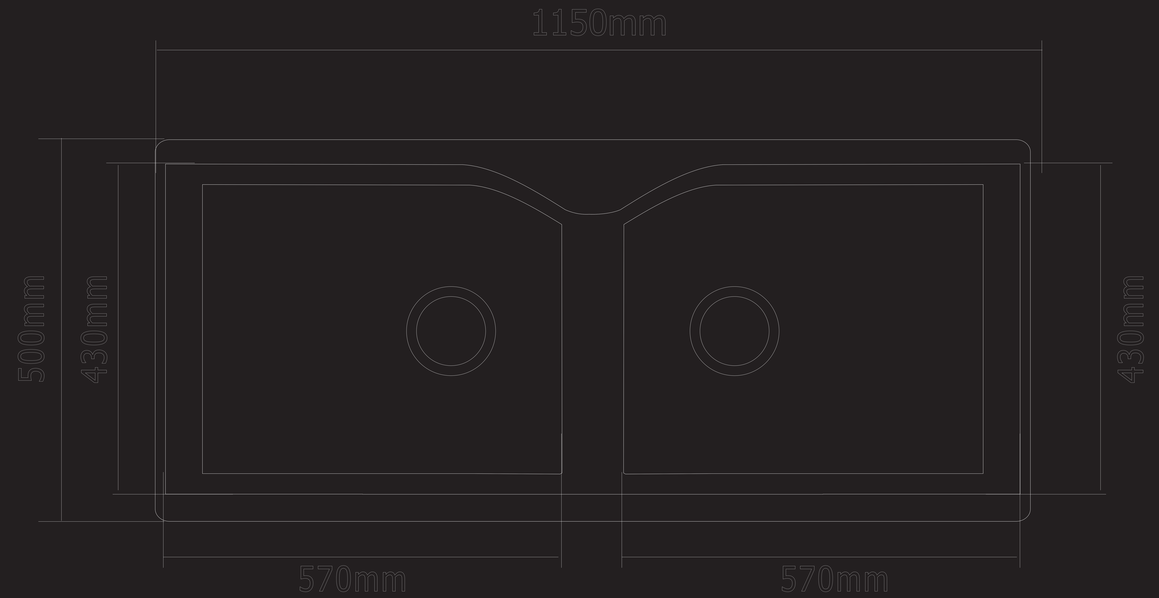
1150mm
500mm
430mm
430mm
570mm
570mm

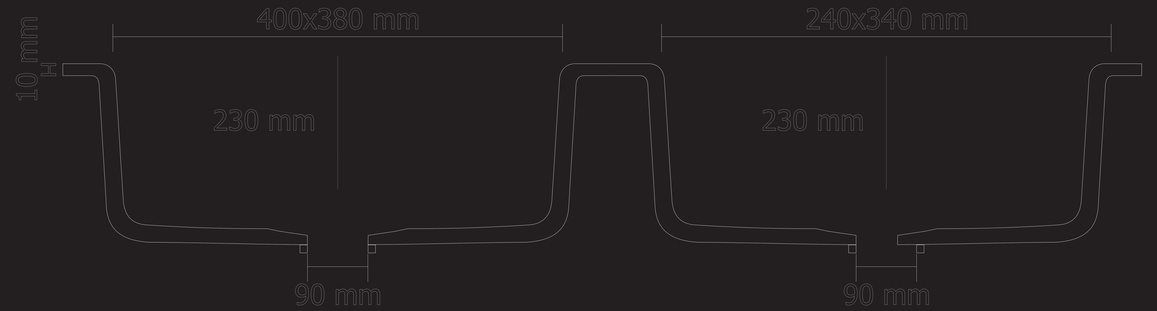
400x380 mm
240x340 mm
10 mm
H
230 mm
230 mm
90 mm
90 mm